SA-W11/W303/W305

SERVICE MANUAL

Ver 1.1 2001.11

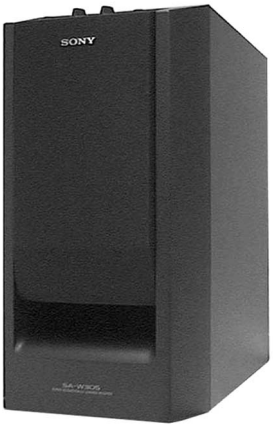

Photo: SA-W305

US Model
SA-W303/W305
Canadian Model
AEP Model
UK Model
SA-W305
E Model
SA-W11/W305
Australian Model
SA-W305
Chinese Model
SA-W11

SPECIFICATIONS

Audio power specifications

POWER OUTPUT AND TOTAL HARMONIC DISTORTION:

With 6 ohms loads, from 20 – 150 Hz; rated 60 watts (SA-W11/W305)/50 watts (SA-W303) per channel minimum RMS power, with no more than 0.8 % total harmonic distortion from 250 milliwatts to rated output.

System

Type Active Super Woofer (magnetically shielded design)

Speaker unit
Woofer: 16cm dia. (6 3/8 in.) x 1

Practical maximum output
SA-W11/W305: 60 W (50 Hz)
SA-W303: 50 W (50 Hz)

Reproduction frequency range
28 – 200 Hz

High frequency cut-off frequency
50 Hz – 200 Hz

Phase selector
NORMAL, REVERSE

Inputs

Input jacks
LINE IN: Input pin jack
SPEAKER IN: Input terminals

General

Power requirements

Where purchased	Power requirements
US, Canadian model	120 V AC, 60 Hz
AEP, UK, German, East European model	220 – 230 V AC, 50/60 Hz
E, Australian, Chinese, Malaysia, Singapore model	110 – 120/220 – 240 V AC, adjustable, 50/60 Hz

Power consumption
35 W

Dimensions Approx. 205 x 380 x 365 mm (w/h/d) (8 1/8 x 15 x 14 3/8 in.)

Mass 9.5 kg (20lb 15oz)

Supplied accessories
Audio connecting cord
(1 phono plug – 1 phono plug) (1)
Speaker cord (2)

Design and specifications are subject to change without notice.

ACTIVE SUPER WOOFER

9-922-813-12
2001K0500-1
© 2001.11

Sony Corporation
Home Audio Company
Published by Sony Engineering Corporation

SONY®

SAFETY CHECK-OUT

After correcting the original service problem, perform the following safety check before releasing the set to the customer:
Check the antenna terminals, metal trim, "metallized" knobs, screws, and all other exposed metal parts for AC leakage.
Check leakage as described below.

LEAKAGE TEST

The AC leakage from any exposed metal part to earth ground and from all exposed metal parts to any exposed metal part having a return to chassis, must not exceed 0.5 mA (500 microampers.). Leakage current can be measured by any one of three methods.

1. A commercial leakage tester, such as the Simpson 229 or RCA WT-540A. Follow the manufacturers' instructions to use these instruments.
2. A battery-operated AC milliammeter. The Data Precision 245 digital multimeter is suitable for this job.
3. Measuring the voltage drop across a resistor by means of a VOM or battery-operated AC voltmeter. The "limit" indication is 0.75 V, so analog meters must have an accurate low-voltage scale. The Simpson 250 and Sanwa SH-63Trd are examples of a passive VOM that is suitable. Nearly all battery operated digital multimeters that have a 2 V AC range are suitable. (See Fig. A)

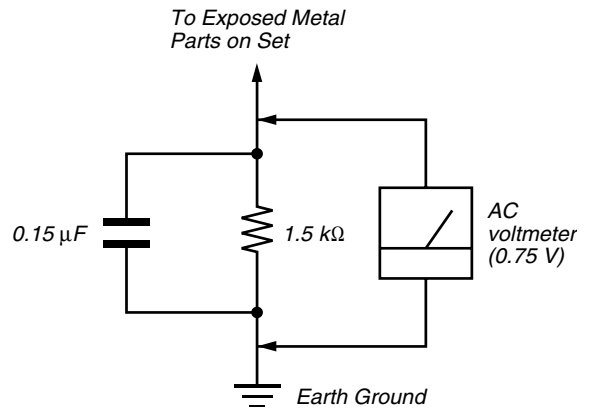

Fig. A. Using an AC voltmeter to check AC leakage.

SAFETY-RELATED COMPONENT WARNING!!

COMPONENTS IDENTIFIED BY MARK ⚠ OR DOTTED LINE WITH MARK ⚠ ON THE SCHEMATIC DIAGRAMS AND IN THE PARTS LIST ARE CRITICAL TO SAFE OPERATION. REPLACE THESE COMPONENTS WITH SONY PARTS WHOSE PART NUMBERS APPEAR AS SHOWN IN THIS MANUAL OR IN SUPPLEMENTS PUBLISHED BY SONY.

ATTENTION AU COMPOSANT AYANT RAPPORT À LA SÉCURITÉ!

LES COMPOSANTS IDENTIFIÉS PAR UNE MARQUE ⚠ SUR LES DIAGRAMMES SCHÉMATIQUES ET LA LISTE DES PIÈCES SONT CRITIQUES POUR LA SÉCURITÉ DE FONCTIONNEMENT. NE REMPLACER CES COMPOSANTS QUE PAR DES PIÈCES SONY DONT LES NUMÉROS SONT DONNÉS DANS CE MANUEL OU DANS LES SUPPLÉMENTS PUBLIÉS PAR SONY.

SECTION 1
GENERAL

• **Location of Controls**

FRONT

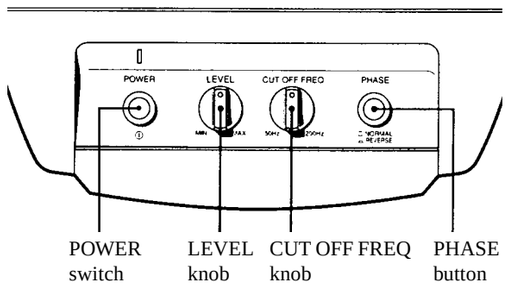

REAR

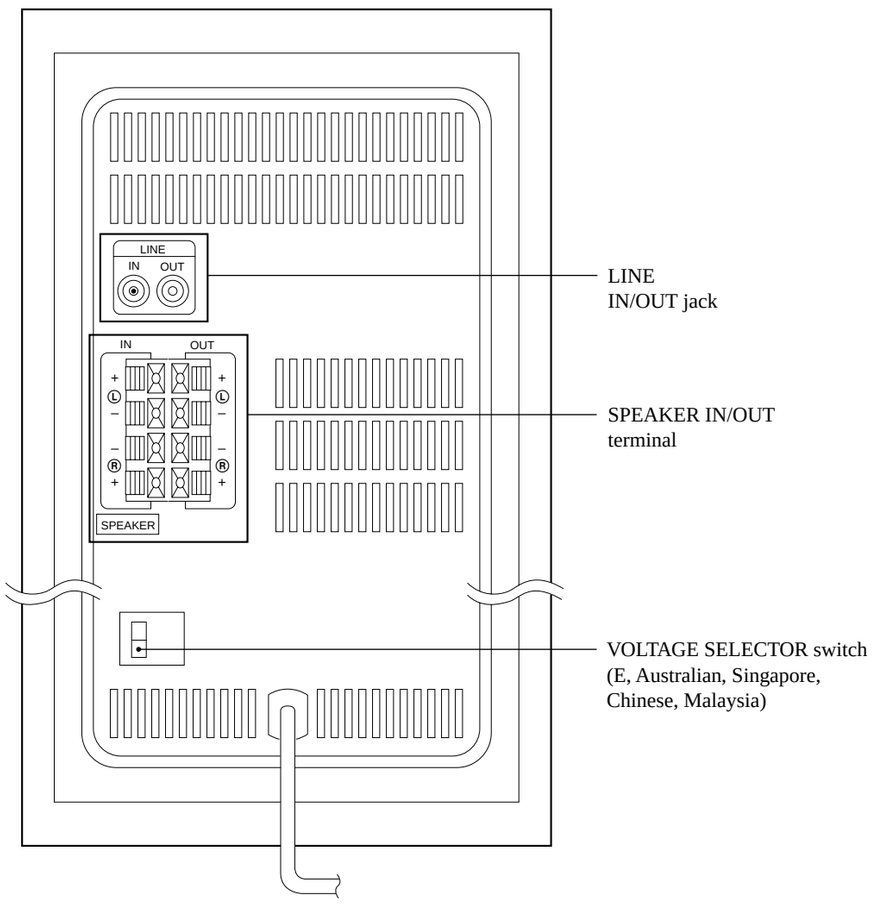

SECTION 2
DIAGRAMS

THIS NOTE IS COMMON FOR PRINTED WIRING BOARDS AND SCHEMATIC DIAGRAMS.
(In addition to this, the necessary note is each block.)

Note on Schematic Diagram:
- All capacitors are in µF unless otherwise noted. pF: µµF 50 WV or less are not indicated except for electrolytics and tantalums.
- All resistors are in Ω and 1/4 W or less unless otherwise specified.
- : nonflammable resistor.
- : panel designation.

Note:	**Note:**
The components identified by mark ⚠ or dotted line with mark ⚠ are critical for safety. Replace only with part number specified.	Les composants identifiés par une marque ⚠ sont critiques pour la sécurité. Ne les remplacer que par une piéce portant le numéro spécifié.

- **B +** : B+ Line.
- **B −** : B– Line.
- Voltages are dc with respect to ground under no-signal conditions.
- Voltages are taken with a VOM (Input impedance 10 MΩ). Voltage variations may be noted due to normal production tolerances.
- Signal path.

Note on Printed Wiring Boards:
- ○——— : parts extracted from the component side.

Abbreviation:

AUS	: Australian
CH	: Chinese
CND	: Canadian
EE	: East European
G	: German
MY	: Malaysia
SP	: Singapore

• **IC Block Diagram**

IC302 µPC1237HA

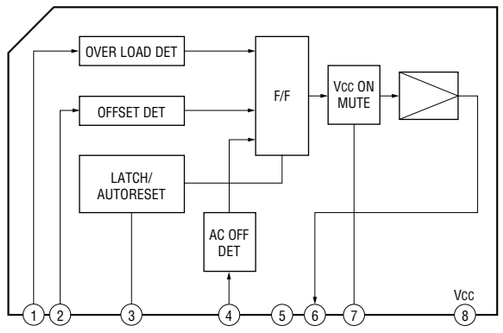

2-1. PRINTED WIRING BOARDS • See page 4 for Note.

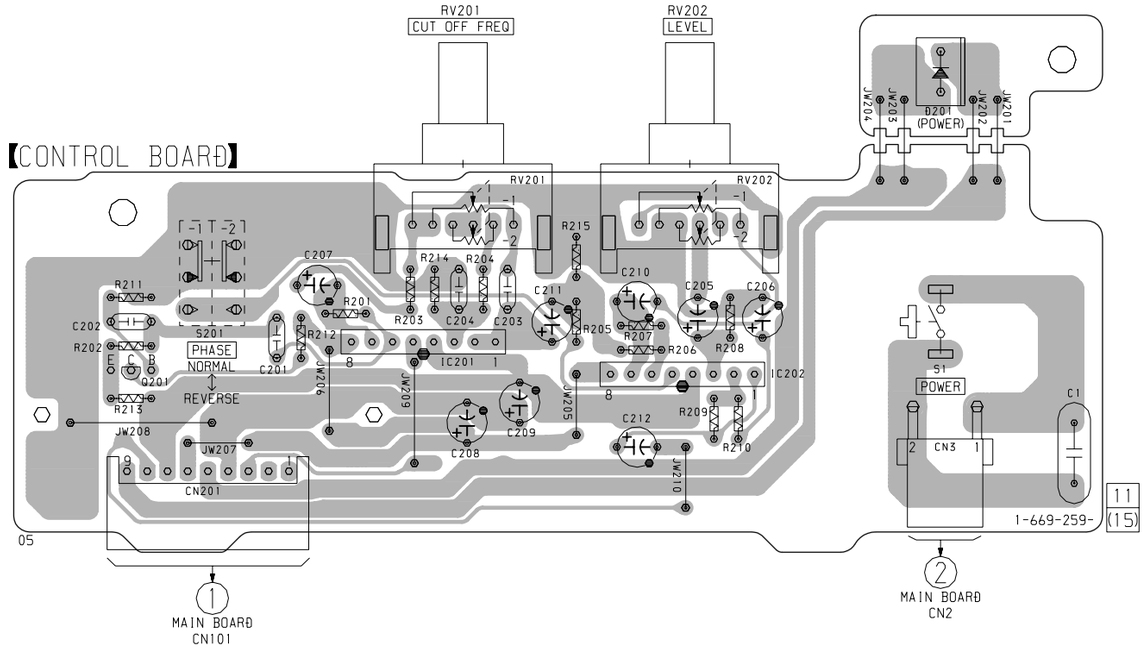

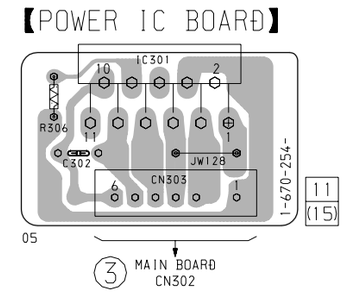

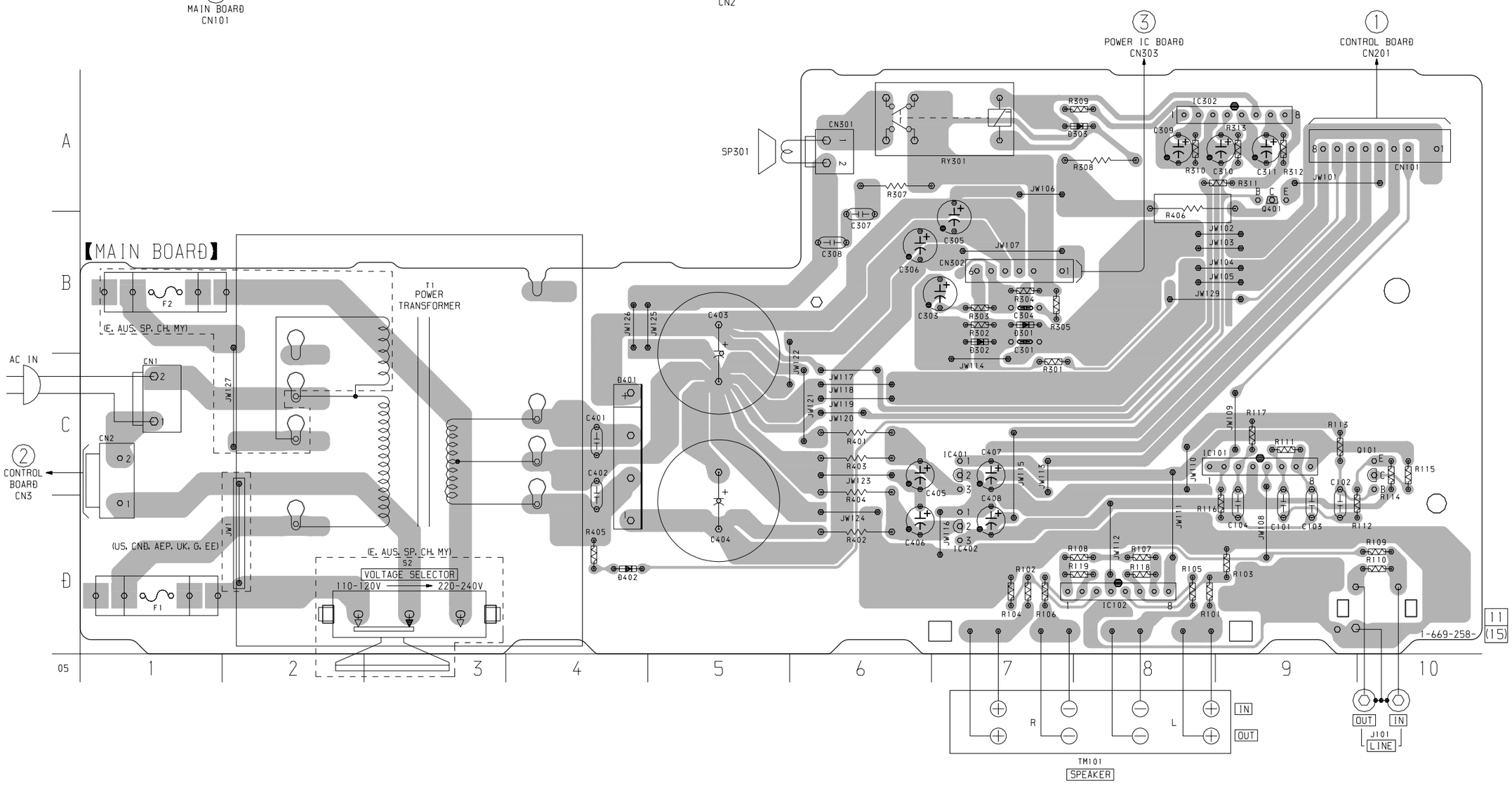

- **Semiconductor Location (MAIN Board)**

Ref. No.	Location
D301	B-7
D302	B-7
D303	A-8
D401	C-4
D402	D-4
IC101	C-9
IC102	D-8
IC302	A-9
IC401	C-7
IC402	D-7
Q101	C-10
Q401	A-9

2-2. SCHEMATIC DIAGRAM • See page 4 for Note. • See page 4 for IC Block Diagram.

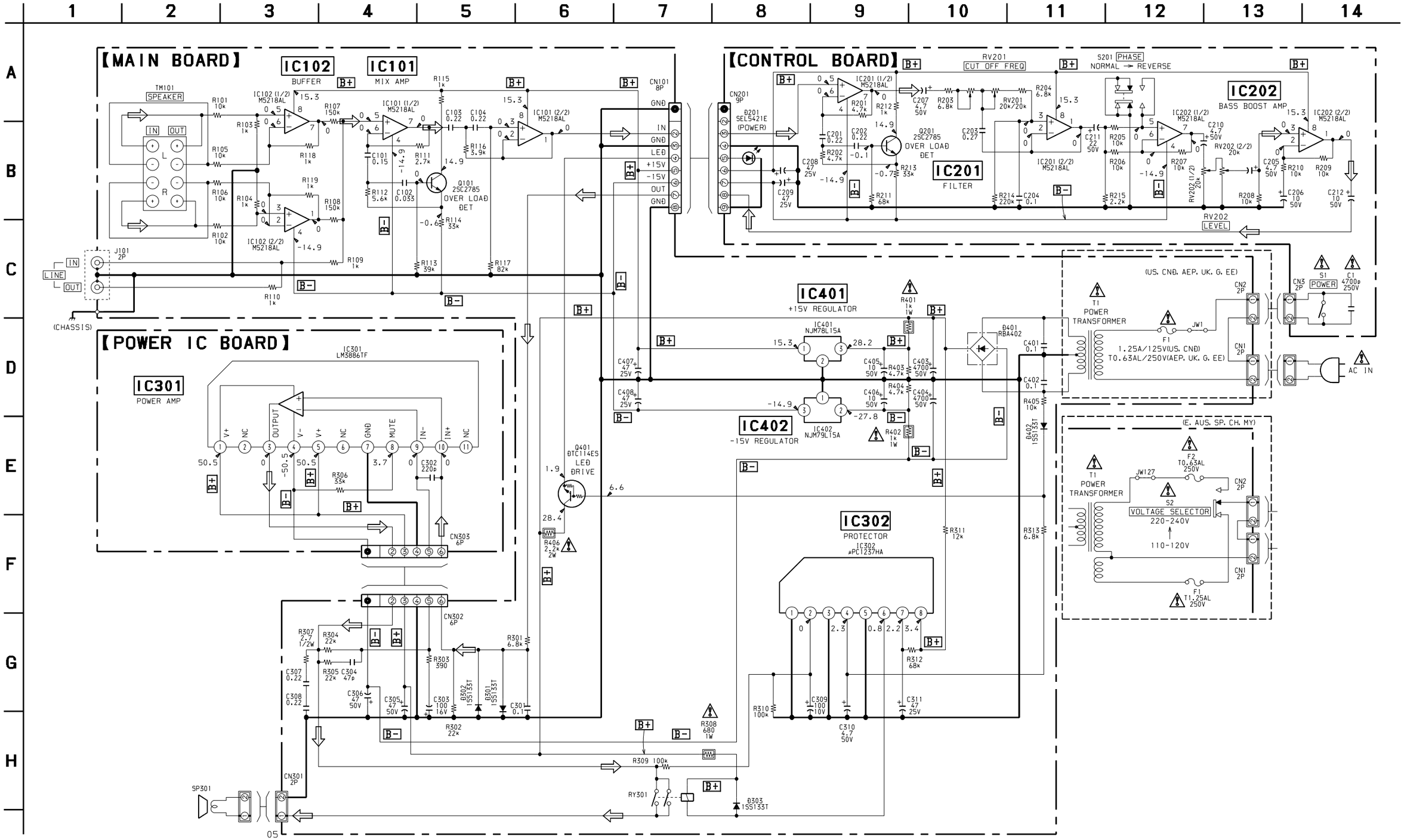

The components identified by mark ⚠ or dotted line with mark ⚠ are critical for safety. Replace only with part number specified.	Les composants identifiés par une marque ⚠ sont critiques pour la sécurité. Ne les remplacer que par une piéce portant le numéro spécifié.

Ver 1.1

SECTION 3
EXPLODED VIEW

NOTE:
- -XX and -X mean standardized parts, so they may have some difference from the original one.
- Color Indication of Appearance Parts
  Example:
  KNOB, BALANCE (WHITE) . . . (RED)
  ↑ Parts Color ↑ Cabinet's Color
- Abbreviation
  AUS : Australian G : German
  CH : Chinese MY : Malaysia
  CND : Canadian SP : Singapore
  EE : East European

- Items marked "*" are not stocked since they are seldom required for routine service. Some delay should be anticipated when ordering these items.
- The mechanical parts with no reference number in the exploded views are not supplied.
- Hardware (# mark) list and accessories are given in the last of the electrical parts list.

The components identified by mark ⚠ or dotted line with mark ⚠ are critical for safety.
Replace only with part number specified.

Les composants identifiés par une marque ⚠ sont critiquens pour la sécurité.
Ne les remplacer que par une pièce portant le numéro spécifié.

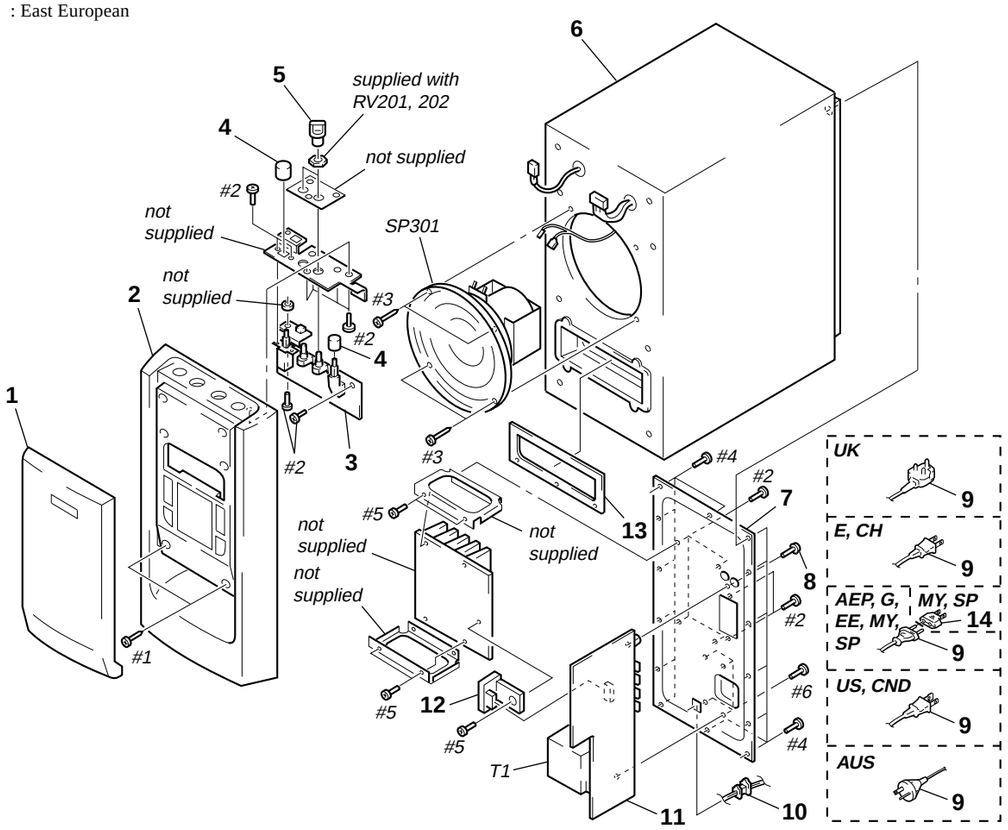

Ref. No.	Part No.	Description	Remark
1	X-4949-571-1	FRAME ASSY, GRILLE (W11: E, MY/S305)	
1	X-4950-129-1	FRAME ASSY, GRILLE (W303)	
1	X-4950-219-1	FRAME ASSY, GRILLE (W11: SP, CH)	
2	X-4950-289-1	PANEL ASSY, FRONT (W305)	
2	X-4950-290-1	PANEL ASSY, FRONT (W303)	
2	X-4950-291-1	PANEL ASSY, FRONT (W11)	
* 3	1-669-259-11	CONTROL BOARD	
4	4-973-938-01	KNOB (A), PUSH (W11: E, MY/W303/W305)	
4	4-973-938-31	KNOB (A), PUSH (W11: SP, CH)	
5	4-999-482-01	KNOB (VOL) (W11: E, MY/W303/W305)	
5	4-999-482-11	KNOB (VOL) (W11: SP, CH)	
* 6	A-4384-984-A	CABINET ASSY, SPEAKER	(W305: US, CND, UK)
* 6	A-4384-985-A	CABINET ASSY, SPEAKER (W11: E, MY/W305:	AEP, G, EE, SP, AUS/W303)
* 6	A-4411-176-A	CABINET ASSY, SPEAKER (W11: SP, CH)	
* 7	4-999-088-11	PANEL, REAR (US, CND)	
* 7	4-999-088-23	PANEL, REAR (E, SP, MY, AUS, CH)	
* 7	4-999-088-31	PANEL, REAR (AEP, UK, G, EE)	

Ref. No.	Part No.	Description	Remark
8	3-710-901-11	SCREW, TAPPING	
⚠9	1-696-845-31	CORD, POWER (AUS)	
⚠9	1-696-571-21	CORD, POWER (UK)	
⚠9	1-782-464-21	CORD, POWER (E, CH)	
⚠9	1-782-603-11	CORD, POWER (AEP, G, EE, SP, MY)	
⚠9	1-783-531-21	CORD, POWER (US, CND)	
* 10	3-703-244-00	BUSHING (2104), CORD	
* 11	A-4407-548-A	MAIN BOARD, COMPLETE (US, CND)	
* 11	A-4407-550-A	MAIN BOARD, COMPLETE (AEP, UK, G, EE)	
* 11	A-4407-551-A	MAIN BOARD, COMPLETE	(E, SP, MY, AUS, CH)
* 12	1-670-254-11	POWER IC BOARD	
13	4-999-093-01	PACKING	
⚠14	1-569-008-11	ADAPTOR, CONVERSION 2P (SP, MY)	
SP301	1-505-925-11	SPEAKER (16cm)	
⚠T1	1-431-774-11	TRANSFORMER, POWER (US, CND)	
⚠T1	1-431-775-11	TRANSFORMER, POWER (AEP, UK, G, EE)	
⚠T1	1-431-776-11	TRANSFORMER, POWER (E, SP, MY, AUS, CH)	

CONTROL MAIN

SECTION 4
ELECTRICAL PARTS LIST

NOTE:
- Due to standardization, replacements in the parts list may be different from the parts specified in the diagrams or the components used on the set.
- -XX and -X mean standardized parts, so they may have some difference from the original one.
- RESISTORS
  All resistors are in ohms.
  METAL: Metal-film resistor.
  METAL OXIDE: Metal oxide-film resistor.
  F: nonflammable
- Abbreviation
  AUS : Australian G : German
  CH : Chinese MY : Malaysia
  CND : Canadian SP : Singapore
  EE : East European

- Items marked "*" are not stocked since they are seldom required for routine service.
  Some delay should be anticipated when ordering these items.
- SEMICONDUCTORS
  In each case, u: µ, for example:
  uA. . : µA. . uPA. . : µPA. .
  uPB. . : µPB. . uPC. . : µPC. .
  uPD. . : µPD. .
- CAPACITORS
  uF: µF
- COILS
  uH: µH

The components identified by mark ⚠ or dotted line with mark ⚠ are critical for safety.
Replace only with part number specified.

Les composants identifiés par une marque ⚠ sont critiquens pour la sécurité.
Ne les remplacer que par une pièce portant le numéro spécifié.

When indicating parts by reference number, please include the board.

Ref. No.	Part No.	Description			Remark
*	1-669-259-11	CONTROL BOARD			
		**********			
		< CAPACITOR >			
⚠C1	1-113-924-11	CERAMIC	0.0047uF	20%	250V
C201	1-136-169-00	FILM	0.22uF	5%	50V
C202	1-136-169-00	FILM	0.22uF	5%	50V
C203	1-136-170-00	FILM	0.27uF	5%	50V
C204	1-136-165-00	FILM	0.1uF	5%	50V
C205	1-126-963-11	ELECT	4.7uH	20%	50V
C206	1-126-964-51	ELECT	10uF	20%	50V
C207	1-126-963-11	ELECT	4.7uH	20%	50V
C208	1-104-664-11	ELECT	47uF	20%	25V
C209	1-104-664-11	ELECT	47uF	20%	25V
C210	1-126-963-11	ELECT	4.7uH	20%	50V
C211	1-126-965-11	ELECT	22uF	20%	50V
C212	1-126-964-51	ELECT	10uF	20%	50V
		< CONNECTOR >			
* CN3	1-770-314-11	PIN, CONNECTOR 2P			
CN201	1-784-980-11	PLUG, CONNECTOR 9P			
		< DIODE >			
D201	8-719-046-42	DIODE SEL5421E-TH8F (POWER)			
		< IC >			
IC201	8-759-634-50	IC M5218AL			
IC202	8-759-634-50	IC M5218AL			
		< TRANSISTOR >			
Q201	8-729-178-59	TRANSISTOR 2SC2785			
		< RESISTOR >			
R201	1-249-425-11	CARBON	4.7K	5%	1/4W
R202	1-249-425-11	CARBON	4.7K	5%	1/4W
R203	1-249-427-11	CARBON	6.8K	5%	1/4W
R204	1-249-427-11	CARBON	6.8K	5%	1/4W
R205	1-249-429-11	CARBON	10K	5%	1/4W
R206	1-249-429-11	CARBON	10K	5%	1/4W
R207	1-249-429-11	CARBON	10K	5%	1/4W
R208	1-249-429-11	CARBON	10K	5%	1/4W

Ref. No.	Part No.	Description			Remark
R209	1-249-429-11	CARBON	10K	5%	1/4W
R210	1-249-429-11	CARBON	10K	5%	1/4W
R211	1-249-439-11	CARBON	68K	5%	1/4W
R212	1-249-417-11	CARBON	1K	5%	1/4W
R213	1-249-435-11	CARBON	33K	5%	1/4W
R214	1-247-887-00	CARBON	220K	5%	1/4W
R215	1-249-421-11	CARBON	2.2K	5%	1/4W
		< VARIABLE RESISTOR >			
RV201	1-223-905-11	RES, VAR, CARBON 20K/20K (CUT OFF FREQ)			
RV202	1-223-905-11	RES, VAR, CARBON 20K/20K (LEVEL)			
		< SWITCH >			
⚠S1	1-554-920-11	SWITCH, PUSH (1 KEY)(POWER)			
S201	1-554-522-00	SWITCH, PUSH (1 KEY)(PHASE)			
**********					
*	A-4407-548-A	MAIN BOARD, COMPLETE (US, CND)			
*	A-4407-550-A	MAIN BOARD, COMPLETE (AEP, UK, G, EE)			
*	A-4407-551-A	MAIN BOARD, COMPLETE			(E, SP, MY, AUS, CH)
		**********			
	1-533-233-11	HOLDER, FUSE			
		< CAPACITOR >			
C101	1-136-167-00	FILM	0.15uF	5%	50V
C102	1-136-159-00	FILM	0.033uF	5%	50V
C103	1-136-169-00	FILM	0.22uF	5%	50V
C104	1-136-169-00	FILM	0.22uF	5%	50V
C301	1-164-159-11	CERAMIC	0.1uF		50V
C303	1-126-933-11	ELECT	100uF	20%	16V
C304	1-162-215-31	CERAMIC	47PF	5%	50V
C305	1-126-967-11	ELECT	47uF	20%	50V
C306	1-126-967-11	ELECT	47uF	20%	50V
C307	1-136-169-00	FILM	0.22uF	5%	50V
C308	1-136-169-00	FILM	0.22uF	5%	50V
C309	1-104-665-11	ELECT	100uF	20%	10V
C310	1-126-963-11	ELECT	4.7uF	20%	50V
C311	1-104-664-11	ELECT	47uF	20%	25V
C401	1-136-165-00	FILM	0.1uF	5%	50V
C402	1-136-165-00	FILM	0.1uF	5%	50V
C403	1-119-940-51	ELECT	4700uF	20%	50V

Ref. No.	Part No.	Description			Remark
C404	1-119-940-51	ELECT	4700uF	20%	50V
C405	1-126-964-11	ELECT	10uF	20%	50V
C406	1-126-964-11	ELECT	10uF	20%	50V
C407	1-104-664-11	ELECT	47uF	20%	25V
C408	1-104-664-11	ELECT	47uF	20%	25V
		< CONNECTOR >			
CN1	1-564-321-00	PIN, CONNECTOR 2P			
CN2	1-580-230-11	PIN, CONNECTOR (PC BOARD) 2P			
CN101	1-785-093-11	PIN, CONNECTOR 8P			
* CN301	1-565-792-11	PIN, CONNECTOR 2P			
		< DIODE >			
D301	8-719-991-33	DIODE 1SS133T-77			
D302	8-719-991-33	DIODE 1SS133T-77			
D303	8-719-991-33	DIODE 1SS133T-77			
D401	8-719-025-03	DIODE RBA-402-SL			
D402	8-719-991-33	DIODE 1SS133T-77			
		< FUSE >			
⚠ F1	1-532-500-31	FUSE (T0.63AL/250V) (AEP, UK, G, EE)			
⚠ F1	1-532-502-31	FUSE (T1.25AL/250V) (E, SP, MY, AUS, CH)			
⚠ F1	1-533-417-11	FUSE, GLASS CYLINDRICAL (DIA.5) (1.25A/125V) (US, CND)			
⚠ F2	1-532-500-31	FUSE (T0.63AL/250V) (E, SP, MY, AUS, CH)			
		< IC >			
IC101	8-759-634-50	IC M5218AL			
IC102	8-759-634-50	IC M5218AL			
IC302	8-759-111-68	IC uPC1237HA			
IC401	8-759-077-92	IC NJM78L15A-T3			
IC402	8-759-077-83	IC NJM79L15A-T3			
		< JACK >			
J101	1-770-157-11	JACK, PIN 2P (LINE)			
		< TRANSISTOR >			
Q101	8-729-178-59	TRANSISTOR 2SC2785			
Q401	8-729-029-66	TRANSISTOR DTC114ESA			
		< RESISTOR >			
R101	1-249-429-11	CARBON	10K	5%	1/4W
R102	1-249-429-11	CARBON	10K	5%	1/4W
R103	1-249-417-11	CARBON	1K	5%	1/4W
R104	1-249-417-11	CARBON	1K	5%	1/4W
R105	1-249-429-11	CARBON	10K	5%	1/4W
R106	1-249-429-11	CARBON	10K	5%	1/4W
R107	1-247-883-00	CARBON	150K	5%	1/4W
R108	1-247-883-00	CARBON	150K	5%	1/4W
R109	1-249-417-11	CARBON	1K	5%	1/4W
R110	1-249-417-11	CARBON	1K	5%	1/4W
R111	1-249-422-11	CARBON	2.7K	5%	1/4W
R112	1-249-426-11	CARBON	5.6K	5%	1/4W
R113	1-249-436-11	CARBON	39K	5%	1/4W
R114	1-249-435-11	CARBON	33K	5%	1/4W
R115	1-249-417-11	CARBON	1K	5%	1/4W
R116	1-249-424-11	CARBON	3.9K	5%	1/4W
R117	1-249-440-11	CARBON	82K	5%	1/4W

Ref. No.	Part No.	Description			Remark
R118	1-249-417-11	CARBON	1K	5%	1/4W
R119	1-249-417-11	CARBON	1K	5%	1/4W
R301	1-249-427-11	CARBON	6.8K	5%	1/4W
R302	1-249-433-11	CARBON	22K	5%	1/4W
R303	1-249-412-11	CARBON	390	5%	1/4W
R304	1-249-433-11	CARBON	22K	5%	1/4W
R305	1-249-433-11	CARBON	22K	5%	1/4W
R307	1-260-069-81	CARBON	2.7	5%	1/2W
⚠ R308	1-215-868-00	METAL OXIDE	680	5%	1W F
R309	1-249-441-11	CARBON	100K	5%	1/4W
R310	1-249-441-11	CARBON	100K	5%	1/4W
R311	1-249-430-11	CARBON	12K	5%	1/4W
R312	1-249-439-11	CARBON	68K	5%	1/4W
R313	1-249-427-11	CARBON	6.8K	5%	1/4W
⚠ R401	1-215-869-11	METAL OXIDE	1K	5%	1W F
⚠ R402	1-215-869-11	METAL OXIDE	1K	5%	1W F
R403	1-260-107-11	CARBON	4.7K	5%	1/2W
R404	1-260-107-11	CARBON	4.7K	5%	1/2W
R405	1-249-429-11	CARBON	10K	5%	1/4W
⚠ R406	1-215-894-11	METAL OXIDE	2.2K	5%	2W F
		< RELAY >			
RY301	1-515-920-11	RELAY (24V)			
		< SWITCH >			
⚠ S2	1-762-753-11	SWITCH, VOLTAGE SELECTION (VOLTAGE SELECTOR) (E, SP, MY, AUS, CH)			
		< TRANSFORMER >			
⚠ T1	1-431-774-11	TRANSFORMER, POWER (US, CND)			
⚠ T1	1-431-775-11	TRANSFORMER, POWER (AEP, UK, G, EE)			
⚠ T1	1-431-776-11	TRANSFORMER, POWER (E, SP, MY, AUS, CH)			
		< TERMINAL >			
TM101	1-537-922-11	TERMINAL BOARD (SP) (SPEAKER IN, OUT)			

****

*	1-670-254-11	POWER IC BOARD			
		**********			
		< CAPACITOR >			
C302	1-162-286-31	CERAMIC	220PF	10%	50V
		< CONNECTOR >			
CN303	1-785-088-11	PIN, CONNECTOR 6P			
		< IC >			
IC301	8-759-299-54	IC LM3886TF			
		< RESISTOR >			
R306	1-249-435-11	CARBON	33K	5%	1/4W

****

The components identified by mark ⚠ or dotted line with mark ⚠ are critical for safety. Replace only with part number specified.	Les composants identifiés par une marque ⚠ sont critiques pour la sécurité. Ne les remplacer que par une pièce portant le numéro spécifié.

Ref. No.	Part No.	Description	Remark
		MISCELLANEOUS	
		**********	
⚠9	1-696-571-21	CORD, POWER (UK)	
⚠9	1-696-845-31	CORD, POWER (AUS)	
⚠9	1-782-464-21	CORD, POWER (E, CH)	
⚠9	1-782-603-11	CORD, POWER (AEP, G, EE, SP, MY)	
⚠9	1-785-531-21	CORD, POWER (US, CND)	
⚠14	1-569-008-11	ADAPTOR, CONVERSION 2P (SP, MY)	
SP301	1-505-925-11	SPEAKER (16cm)	

****

****
HARDWARE LIST
****

#1	7-685-665-79	SCREW +BVTP 4X25 TYPE2 N-S	
#2	7-685-647-79	SCREW +P 3X10 TYPE2 NON-SLIT	
#3	7-685-664-79	SCREW +PTP 4X20 TYPE1	
#4	7-685-663-79	SCREW +BVTP 4X16 TYPE2 N-S	
#5	7-685-648-79	SCREW +P 3X12 TYPE2 NON-SLIT	
#6	7-685-660-19	SCREW +BVTP 4X10 TYPE2 N-S	

****

ACCESSORIES
****

	1-751-598-11	CORD, CONNECTION (PIN-PIN)
	1-769-433-11	CORD, SPEAKER
	3-862-214-11	MANUAL, INSTRUCTION (ENGLISH) (W303/W305: US, AEP, EE, E)
	3-862-214-21	MANUAL, INSTRUCTION (ENGLISH, FRENCH) (W11/W305: CND, UK, G, SP, AUS)
	3-862-214-31	MANUAL, INSTRUCTION (GERMAN, SPANISH, PORTUGUESE, DUTCH, ITALIAN, SWEDISH, FINNISH, DANISH, CHINESE) (W11/W305: G, SP)

The components identified by mark ⚠ or dotted line with mark ⚠ are critical for safety. Replace only with part number specified.	Les composants identifiés par une marque ⚠ sont critiques pour la sécurité. Ne les remplacer que par une pièce portant le numéro spécifié.

MEMO

REVISION HISTORY

Clicking the version allows you to jump to the revised page.
Also, clicking the version at the upper right on the revised page allows you to jump to the next revised page.

Ver.	Date	Description of Revision
1.1	2001.11	Correction of Part No. for power cord (US, Canadian model) (SPM-01047)
1.0	1998.04	New